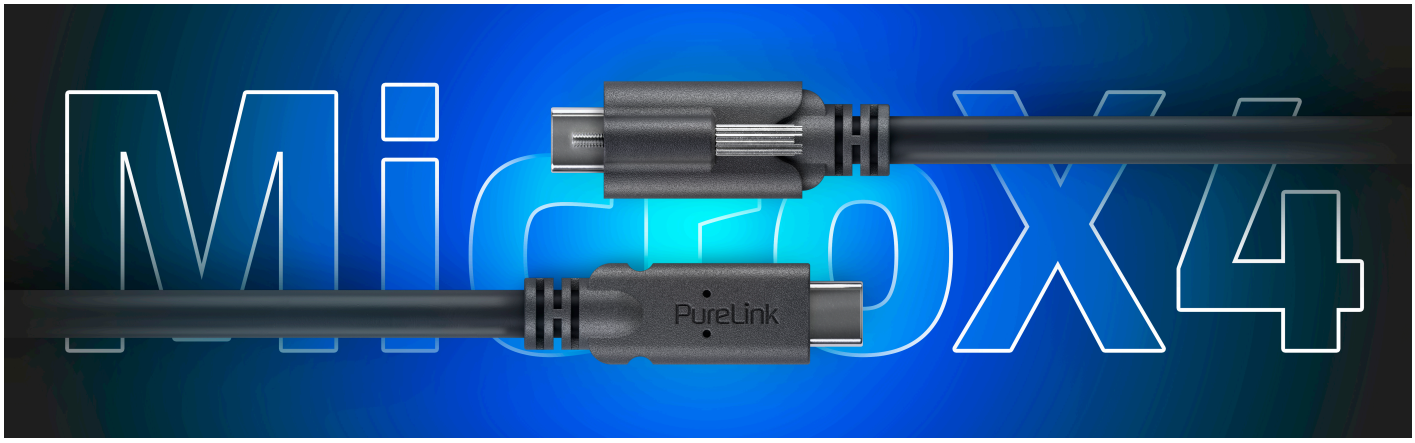

PureInstall MicroX4 - USB4 Gen2 USB-C Cable, Passive

PI6600 – Passive USB4 Gen2x2 Cable: Data, Video and Power Transmission
The PI6600 passive USB4 Gen2x2 cable utilises a micro coaxial topology with silver-plated copper conductors, supporting high-speed data, video, and power transmission in professional AV environments. The cable's passive construction eliminates active chipsets, maintaining compatibility across a wide range of devices and reducing potential points of failure. The optional TLS (Tru-Lock-System) provides mechanical security for fixed installations, while the integrated E-marker supports USB Power Delivery up to 240W (3.00-5.00 m up to 100W SPR). Typical applications include meeting rooms, control rooms, digital signage, and hybrid workspaces requiring unified signal and power delivery over extended distances.

- **Passive USB4 Gen2x2 Data Path:** The cable supports USB4 Gen2x2 data rates up to 20Gbps (4.00-5.00m up to 10Gbps), with passive signal transmission maintaining downward compatibility with legacy USB standards. Data throughput remains stable over lengths up to 5 metres, with reduced rates at maximum extension to preserve signal integrity.
- **Silver-Plated Copper Conductors:** Silver-plated copper (SPC) conductors minimise electrical resistance, optimising high-frequency data and video transmission. This construction supports reliable performance in electrically demanding AV installations.
- **Optional Locking Mechanism (TLS):** The Tru-Lock-System (TLS) provides mechanical retention and employs a colour-coded locking tab, preventing accidental disconnection in rack, podium, or wall-mounted scenarios.
- **Micro Coaxial Data Transmission:** Micro coaxial cable construction improves noise rejection and flexibility, supporting longer cable runs and reducing electromagnetic interference (EMI) in environments with high electrical noise.
- **E-Marker and USB Power Delivery:** Integrated E-marker circuitry enables USB Power Delivery (PD) up to 240W (48V/5A) in EPR mode, with support for up to 100W (20V/5A) in SPR mode over extended lengths. Video transmission supports resolutions up to 8K at 30Hz via DisplayPort Alt Mode.

Technical Integration for Unified AV Signal Paths
The PI6600 cable addresses common AV installation challenges by combining high-speed data, video, and power transmission within a single passive cable assembly. Clever connectors and micro coaxial construction support secure, interference-resistant connections in fixed and semi-permanent AV environments, facilitating reliable integration across diverse professional applications.

Features

- Passive USB4 Gen2x2 – 20Gbps (4.00m-5.00m up to 10Gbps), downward compatible
- Silver-plated copper (SPC) conductors for lowest possible resistance
- USB-C male to USB-C male, compatible with TLS locking
- Micro coax data transmission for improved noise rejection, greater flexibility and range
- E-marker, USB PD 240W 48V / 5A EPR (3.00-5.00m up to 100W SPR) up to 8K 30Hz

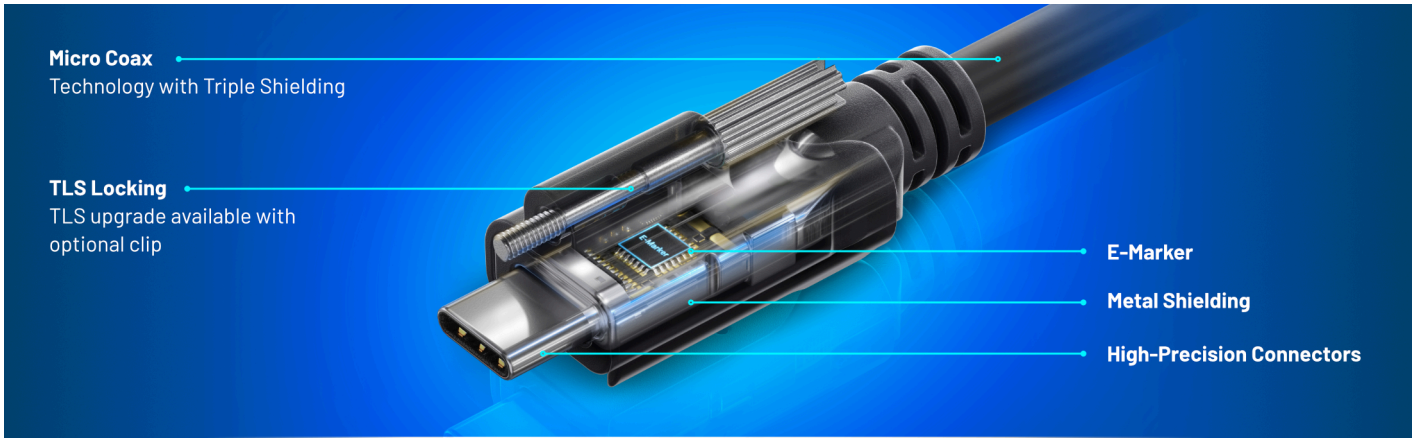

Specifications

Cable	
Cable standard	USB 20Gbps 240W
Cable jacket material	Polyvinyl Chloride (PVC)
Cable jacket characteristics	Soft
Cable shape	Round
Cable fire class	UL VW-1
Cable length detection	Yes
Cable shielding	Tripple shielded
Shield materials	Tinned copper braid, Aluminium foil + Mylar layer
Additional cable components	Micro Coax (Data lines)
Conductor material	Silver-Plated Copper (SPC)
Raw Cable Rated voltage	30 V

Connection	
Connector material	Copper, Nickel
Connector housing material	Polyvinyl Chloride (PVC)
Connector contacts plating	Gold-plated
Connector shielding	Yes
Connector shield material	Steel SPCC
Connector 1 standard	USB-IF
Connector 1	USB Type-C (Gen2)
Connector 1 gender	Male connector
Connector 1 form factor	Straight
Connector 1 lockable	No locking
Connector 1 pinout	22+1 (Type-C full feature)
Connector 1 dimensions (WxDxH) (mm)	12.70 mm x 37.00 mm x 6.85 mm
Connector 2 standard	USB-IF
Connector 2	USB Type-C (Gen2)
Connector 2 gender	Male connector
Connector 2 form factor	Straight
Connector 2 lockable	No locking
Connector 2 pinout	22+1 (Type-C full feature)
Connector 2 dimensions (WxDxH) (mm)	12.70 mm x 37.00 mm x 6.85 mm

Features	
Connector adapter	No

USB	
USB version	USB4 Gen 2x2
USB data rate (Gbit/s)	20 Gbit/s
DP Alt mode	Yes
USB Power Delivery Range	240W EPR
USB port voltage (V)	48 V
USB port current (A)	5 A
Fast charging	Yes
Vendor code	0x35F8
e-Marker	Yes

General Information	
Operating temperature (T-T)(°C)	from 0 °C to 60 °C
Certification	RoHS

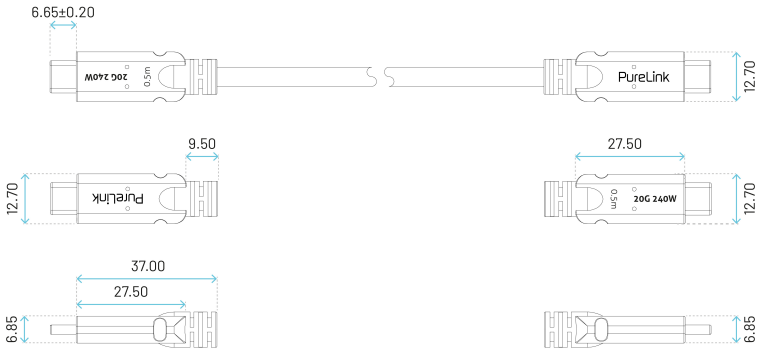

All measurements in mm.

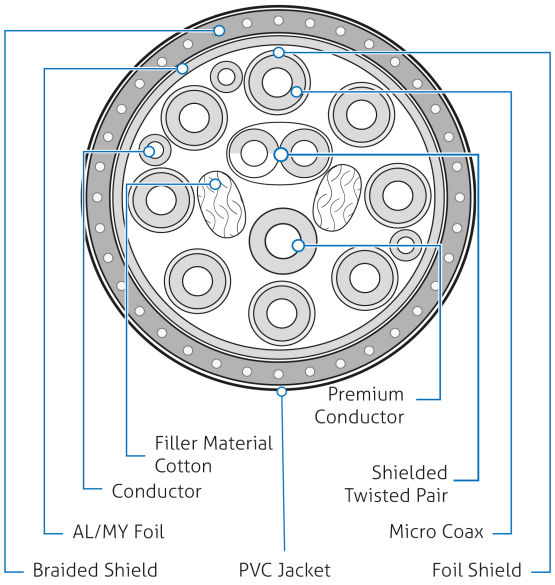

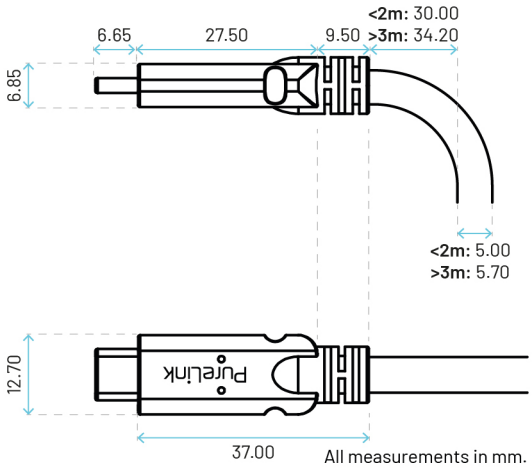

All measurements in mm.

Overview

Parent	Item-No.	Cable length	Cable diameter (mm)	Primary conductor gauge (AWG)	Minimum bending radius (fixed installation) (mm)	USB Power Delivery revision	Maximum resolution (USB)	USB Power Delivery Range	USB port voltage (V)	Cable standard
PI6600	PI6600-005	0.50 m	5 mm	30	30 mm	USB PD 3.1	7680× 4320p	240W EPR	48 V	USB 20Gbps 240W
	PI6600-010	1.00 m	5 mm	30	30 mm	USB PD 3.1	7680× 4320p	240W EPR	48 V	USB 20Gbps 240W
	PI6600-015	1.50 m	5 mm	30	30 mm	USB PD 3.1	7680× 4320p	240W EPR	48 V	USB 20Gbps 240W
	PI6600-020	2.00 m	5 mm	30	30 mm	USB PD 3.1	7680× 4320p	240W EPR	48 V	USB 20Gbps 240W
	PI6600-030	3.00 m	5.7 mm	28	34.2 mm	USB PD 3.0	7680× 4320p	100W SPR	20 V	USB 20Gbps 100W
	PI6600-040	4.00 m	5.7 mm	28	34.2 mm	USB PD 3.0	3840× 2160p	100W SPR	20 V	USB 10Gbps 100W
	PI6600-050	5.00 m	5.7 mm	28	34.2 mm	USB PD 3.0	3840× 2160p	100W SPR	20 V	USB 10Gbps 100W

© 2025 PureLink. PureLink, the PureLink logo and other PureLink marks are owned by PureLink and may be registered. All other trademarks are the properties of their respective owners. PureLink assumes no responsibility for any errors that may appear in this publication. Product, pricing and feature information contained herein is subject to change without notice.

Contact us at
www.purelink.de

+49 5971 800 299-0
info@purelink.de

PureLink GmbH
Von-Liebig-Str. 10
48432 Rheine
Germany

PureLink UK LTD.
Carpenter Court, 1 Maple Road
Bramhall, Stockport - Cheshire SK7 2DH
United Kingdom

v03-2026