VWPOP65-L

Pop-out Video Wall Mount for 42"-65" screens



VWPOP65-L is a professional pop-out mount designed to build a video wall of modules in a comprehensive and visually appealing way. Eight positions of screen adjustment, spring-loaded mechanism for adjusting the masses of individual screens or an easy service access system offer great construction possibilities. This mount is the number one choice for users who care about intuitiveness and operating comfort. VWPOP65-L provides optimum comfort during the construction of a modular audio/visual wall.

FEATURES:

- Independent 8 position adjustment allows precise alignment of screens without the use of tools
- The retractable mechanism provides convenient service access to screens installed in recesses and places difficult to access
- The retractable mechanism can be secured with a lock screw to prevent the screen from being accidentally extended
- Modular design allows the building of video walls in various configurations using multiple VWPOP65-L mounts and spacers between the modules
- Open product design provides full access to cabling
- Mounting holes and carefully selected spacers eliminate the need for calculations on site
- Adjustment of the retractable mechanism spring enables proper adjustment for screens of different masses to obtain safe and controlled extension
- TUV tested





60kg



100x100
600x400

RoHS Compliant





PRODUCT SPECIFICATIONS

Short index	VWPOP65-L
Category	Video Wall Mounts
Product group	Video Wall & Menu Board Mounts
Colour	Black
Warranty	Limited 5-years
Number of screens	1
Minimum screen size	42"
Maximum screen size	65"
Maximum load	60 kg
Screen orientation	Landscape
Height adjustment	Yes
VESA Mounting Compatibility	100×100 up to 600×400

sales@edbak.com
+48 81 562 81 19

TECHNICAL SPECIFICATIONS

Product dimensions	W: 834 mm D: 82,5 mm H: 531 mm (W:32,75" D:3,24" H:20,86")
Product weight	13,6 kg (29,98 lb)
Max. mounting pattern	600 mm x 400 mm
Min. mounting pattern	100 mm x 100 mm

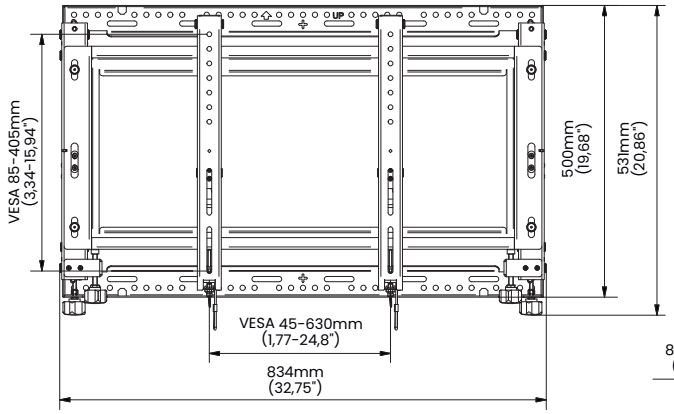

FRONT VIEW

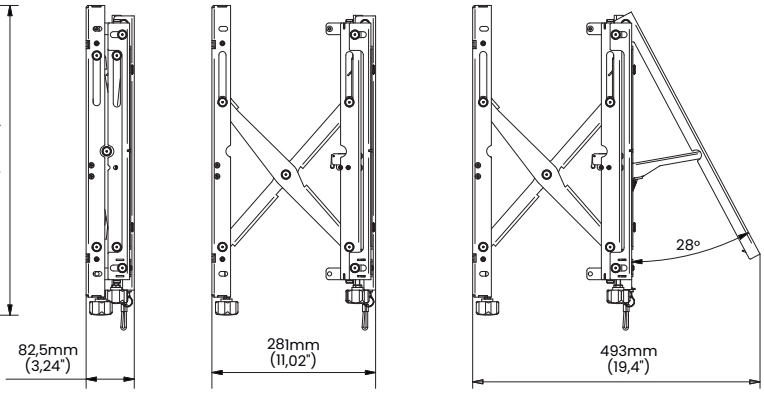

SIDE VIEW

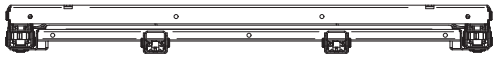

TOP VIEW

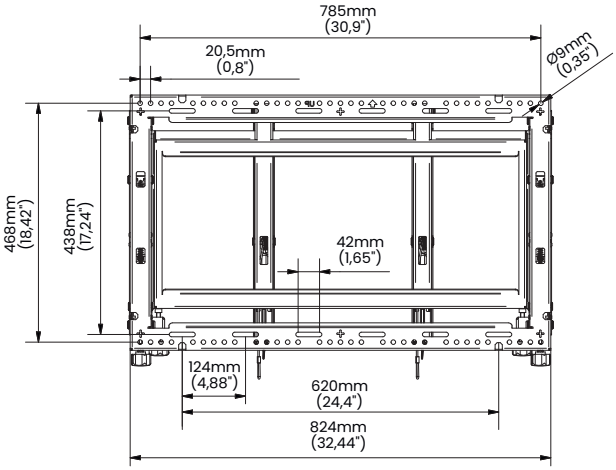

BACK VIEW

LOGISTICS DATA

SAP INDEX	EAN CODE	COLOUR	PACKAGE DIMENSIONS	PACKAGE WEIGHT
WUSC-VWPOP65-L	5908252968589	BLACK	890 x 560 x 110 mm 35,04 x 22,05 x 4,33"	14,4 kg 31,74 lb

HS Code (Harmonized System): 732690, HTS Code (Harmonized Tariff Schedule): 7326909890, Country of Origin: Poland

2026 – EDBAK Sp. z o.o. All rights reserved.
The information included in the specification reflects the current technical specifications at the time of printing. We reserve the right to modify technical or physical specifications without prior notice. EDBAK name and EDBAK logo are registered trademarks of EDBAK Sp. z o.o. All EDBAK images and symbols are sole property of EDBAK Sp. z o.o. Edbak shall not be held liable for any loss or damage caused by incorrect installation or mounting. Copying this specification in whole or in part is only allowed after obtaining written consent from EDBAK Sp. z o.o. WWTR-TRV100-210601-EN