VWPOP95-L

for 70"-98" screens, landscape



VWPOP95-L is a professional pop-out mount designed to build a video wall in a comprehensive manner. Independent 8-point adjustment allows precise alignment of screens without the use of tools. The open design allows full access to cabling, and the included ties are used to hide the cables easily and aesthetically. Special retractable system for easy access for service purposes. VWPOP95-L is equipped with a lock to prevent uncontrolled structure opening. This mount ensures optimum comfort when installing a video wall.

FEATURES:

- Independent 8-point adjustment allows precise alignment of screens without the use of tools
- The retractable mechanism provides convenient service access to screens installed in recesses and places difficult to access for service purposes
- 20° tilt of the screen with the mount open increases access to the back of the screen from the bottom
- Mounting holes and carefully selected spacers eliminate the need for calculations on site







PRODUCT SPECIFICATIONS

Short index	ITSV03
Category	Video Wall Mounts
Product group	Pop-out mounts
Colour	Black
Warranty	Limited 5-years
Minimum screen size	70"
Maximum screen size	98"
Maximum load	130 kg
Forward tilting	0+20°
VESA Mounting Compatibility	100x100 up to 800 x 600

sales@edbak.com
+48 81 562 81 19

TECHNICAL SPECIFICATIONS

Product dimensions	W: 1083 mm D: 110 mm H: 701 mm (W:42,64" D:4,33" H:27,60")
Product weight	32,5 kg (72 lb)
Min. mounting pattern	60 mm x 85 mm
Max. mounting pattern	800 mm x 606 mm

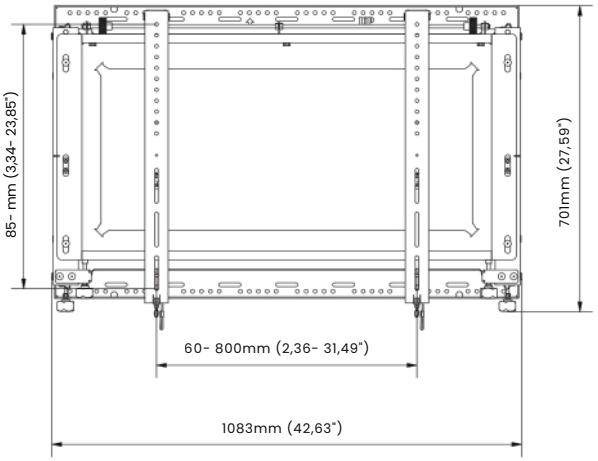

FRONT VIEW

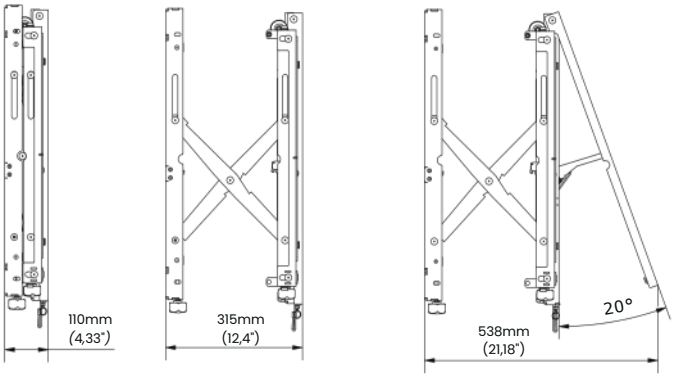

SIDE VIEW

SIDE VIEW

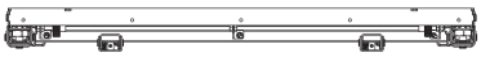

TOP VIEW

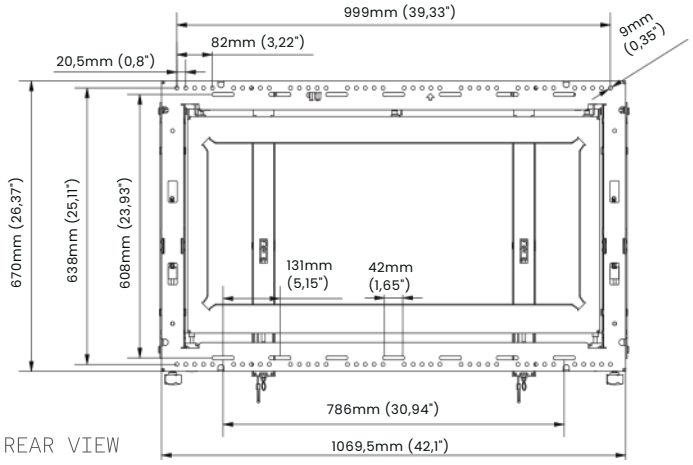

REAR VIEW

LOGISTICS DATA

SAP INDEX	EAN CODE	COLOUR	PACKAGE DIMENSIONS	PACKAGE WEIGHT
WUSC-VWPOP95-L	5908252968176	BLACK	1125 x 790 x 120 mm 48,23 x 31,10 x 4,72"	36 kg 79 lb

HS Code (Harmonized System): 732690, HTS Code (Harmonized Tariff Schedule): 7326909890, Country of Origin: Poland

2021 – EDBAK Sp. z o.o. All rights reserved. The information included in the specification reflects the current technical specifications at the time of printing. We reserve the right to modify technical or physical specifications without prior notice. EDBAK name and EDBAK logo are registered trademarks of EDBAK Sp. z o.o. All EDBAK images and symbols are sole property of EDBAK Sp. z o.o. Edbak shall not be held liable for any loss or damage caused by incorrect installation or mounting. Copying this specification in whole or in part is only allowed after obtaining written consent from EDBAK Sp. z o.o. WWTR-TRV100-210601-EN